ISSN 1392–1320 MATERIALS SCIENCE (MEDŽIAGOTYRA). Vol. XX, No. X. 2023

Influence of Cutting Parameters During Machining of Sintered Iron-Copper Parts After Impregnation with Copper-Based Material

Viktors MIRONOVS [1] *, Artis KROMANIS [2], Eriks GERINS [2], Gatis MUIZNIEKS [2]

[1] *Riga Technical University, Riga Technical University, Faculty of Mechanical Engineering, Transport and Aeronautics, Scientific Laboratory of Powder Materials. 6B Kipsalas Street, room 319, Riga, LV-1048, Latvia*
[2] *Riga Technical University, Department of Mechanical Engineering and Mechatronics, P. Valdena Street 1-107, Riga, LV-1048, Latvia*

crossref http://dx.doi.org/10.5755/j02.ms.30268

Received 06 December 2021; accepted 12 May 2022

Products made from powder materials differ in their structure significantly from parts made using traditional manufacturing methods such as rolling, casting, or forging. Particular interest is in parts made by powder metallurgy (PM) based on iron infiltrated with copper (Fe--C -Cu PM). In the first part of this research, analysis of the Fe--C -Cu PM part is performed. Another aspect of this research is an investigation of the post-processing of PM parts, especially using conventional machining such as turning. Accordingly, the second part of this research is directed at studies of technological assurance of Fe--C -Cu PM part in turning. Different structure of PM parts also requires a different approach to their machining which was the main object of this research. In the evaluation of technological assurance, the surface roughness parameters were chosen as the main quality identifying parameters.
Key words: powder metallurgy part, impregnation, machining, turning, surface roughness.

1. INTRODUCTION

Powder metallurgy (PM) is very widely used in the automotive and other industries due to its ability to meet a wide range of functional requirements for products and high productivity in manufacturing [1, 2]. They have several advantages, including reduced product weight and the ability to achieve defined properties in the final product. However, to meet all product requirements, it is necessary to ensure the specified tolerances for accuracy and specified surface finish or roughness. These specific product requirements cannot always be obtained by powder metallurgy process and further post-processing is necessary. The post-processing mainly includes such machining processes as turning, milling, grinding, etc. As such mechanical processing or machining of powder metallurgy parts significantly differ from machining traditional metals or its alloys because of their specific properties. Primarily because the distinguishing feature of the powder metallurgy parts is their porosity. Research in this area (machining of PM parts) is shown in a number of works wherein the PM parts as iron-containing powder materials were post-processed by drilling and turning methods [3, 4].

Iron-copper powder materials have high electrical and thermal conductivity, which is of great interest for many industrial applications. Modern powder metallurgy technologies allow the creation of products with complex shapes [5 – 7]. However, in many cases, post-processing or further machining is also required so that the final product complies with the tolerances and surface roughness specified in the manufacturing drawing.

In PM, the method of impregnation of powder components with metal melts is widely used. Its main application is the manufacture of high-density products. The pores of the compacted powder part, which contains Fe-C, are filled with a cooper-based melt using the capillary forces of the porous part. The method has shown high efficiency in the manufacture of products of complex design, consisting of several parts [15, 16]. One such application is the manufacturing of stages of centrifugal pumps [16]. The casing, impeller and bushing of the centrifugal pump are pressed separately, but their sintering is carried out simultaneously with the melt impregnation of the entire complex of components of the centrifugal pump. Nevertheless, additional machining of the resulting composite or melt impregnated material (Fe--C -Cu PM) is required. When manufacturing parts of complex configuration, microcracks may appear. Sintering with impregnation leads to positive changes in the state of the pore structure, however, possible microcracks and residual pores should influence the choice of cutting modes [17, 18].

The purpose of this research was to study the influence of the main cutting parameters, such as cutting speed (*v*), feed (*f*), on the qualitative parameters of the product surface, primarily on the surface roughness (*R*a, *R*z, *R*q) of machined parts made of Fe--C -Cu PM. The study also concerned the analysis of the microstructure of a part made of Fe--C -Cu PM.

* Corresponding author. Tel.: +37129146944.
E-mail address: *viktors.mironovs@rtu.lv* (V. Mironovs)

2. POWDER METALLURGY (PM) PART

The PM part to be machined was a Fe--C -Cu PM part. The chemical composition of Fe--C -Cu PM is as follows: Cu content is 20 wt.%, C content is 1.2 wt.% and Fe as the rest.

Microstructure analysis was performed to evaluate the microstructure in the PM part. Analysis was performed on a light optical microscope Meiji Techno IM 7200. The microstructure of the samples was evaluated in both unetched and etched conditions. As most of the material consists of iron, for etching a nital (ethanol nitric acid) was used. Unetched |Fe--C -Cu PM part sample under a variety of magnifications as shown in Fig. 1. The figures allow assessing the homogeneity of this material, presence of various non-metallic inclusions and pores, and voids. In Fig. 1 b a distinguishing presence of two phases in the material can be seen – iron (darker colour) and copper (lighter colour) phases.

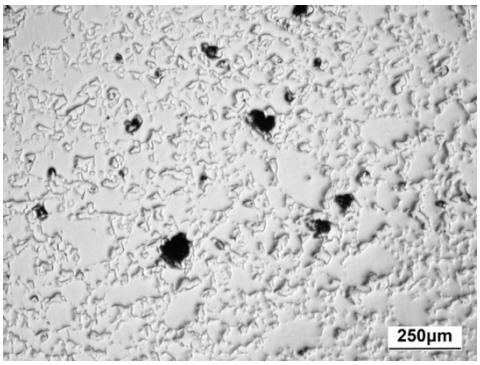

a

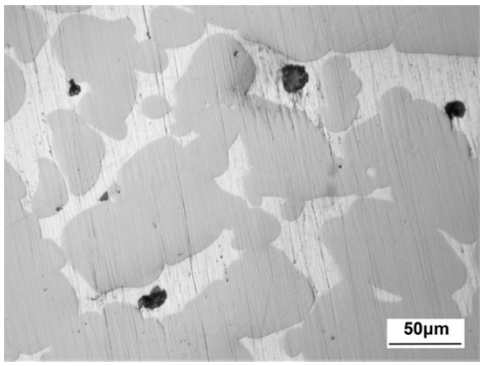

b

Fig. 1. A microstructure of a non-etched Fe--C -Cu PM part at: a – magnification of 50^x; b – magnification of 500^x

Due to the excellent wettability and slight miscibility of iron in copper, a good interface is formed between them. Iron particles provide a strengthening effect to the copper matrix. In addition, in Fig. 1 several dark dots can be seen indicating the porosity of the material, where complete sintering of the powder has not taken place. The material's porosity is formed during sintering due to the low wettability of mullite with the matrix metal or pore caused by the diffusion of liquid copper into iron. This porosity is a distinguishing feature of PM parts compared to the parts made by conventional manufacturing methods such as rolling, casting or forging. This porosity directly influences post-processing or machining characteristics and subsequently the quality of post-processed or machined PM part which is discussed in the chapters below.

After etching of the Fe-Cu-C PM part, the microstructure as seen in Fig. 2 mostly shows pearlite grains in the copper matrix. Graphite (carbon) tends to diffuse in iron during sintering and forms pearlite, which is the harder phase. At the higher magnification (Fig. 2b), some grains contain ferrite and laminar pearlite by copper matrix. Moreover, fine porosity is also observed on the etched microstructure (Fig. 3).

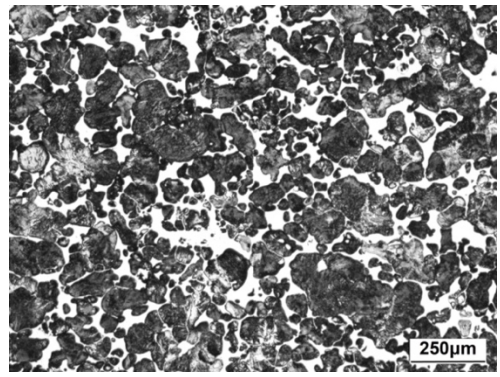

a

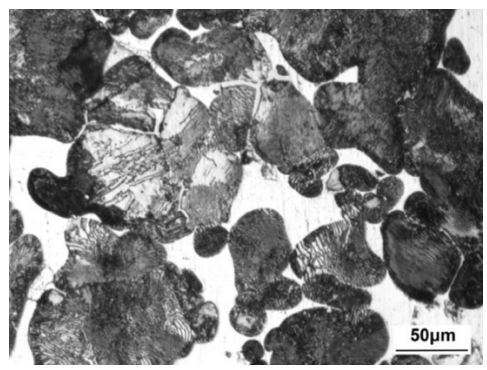

b

Fig. 2. A microstructure of an etched Fe--C -Cu PM part at: a – magnification of 50^x; b – magnification of 500^x

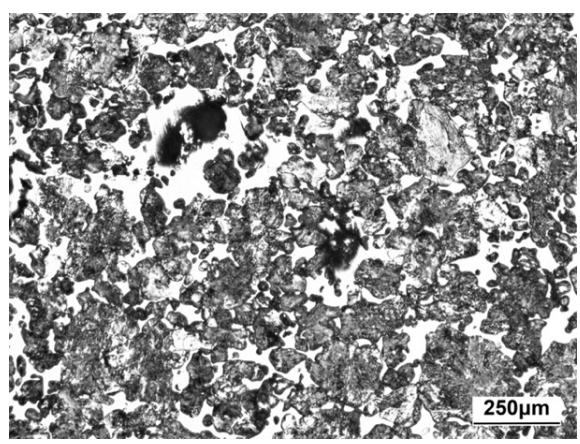

Fig. 3. A microstructure of an etched Fe--C -Cu PM part at a magnification of 100^x

Unfortunately, quantitative measurements were problematic due to the similar appearance of porosity and graphite under the microscope. Moreover, fine porosity is also observed on the etched microstructure (Fig. 3). Unfortunately, quantitative measurements were problematic due to the similar appearance of porosity and graphite under the microscope.

3. MACHINING OF THE Fe--C -Cu PM PART

The PM part used for machining (turning) has a very complex structure making turning even more challenging (Fig. 4). The outer diameter of the PM part was machined utilizing finishing machining techniques. The finishing process is the final machining process, in which a final surface, especially a final surface roughness, is created. The surface roughness is one of the main quality parameters, therefore reaching specified surface roughness is an essential quality assurance requirement.

a b

Fig. 4. a – Fe--C -Cu PM part to be machined; b – machined Fe--C -Cu PM part in the chuck of the lathe

Turning was performed on CNC lathe Okuma L200 E-M. The cutting insert used for turning was VCGX110304-AL H10. The cutting insert is suitable for machining N (non-ferrous) ISO-group materials and its geometry is designed for finishing operations. The cutting insert has the following parameters: the insert radius (RE) is 0.4 mm, the cutting edge effective length (L) is 10.671 mm, the insert thickness (S) is 3.175 mm, and the inscribed circle diameter (IC) is 6.35 mm [13]. 7 cutting inserts with two cutting edges were used for this research so that for each experiment new cutting edge was used. Hence, we have avoided uncertainty which could raise from wear of a cutting edge. Moreover, machining was performed under dry conditions – no cooling fluid was used. Cooling fluid was not used for several reasons. First, the use of cooling fluid is not advisable for PM parts because it may contaminate the PM part so much that it is not possible to use it. The cooling fluid may enter the pores of the PM part so deep that it is impossible to clean it. As the result of machining, a contaminated part is achieved. Secondly, the use of cooling fluid would be another variable in the experiment. As this research did not have many experiments, the use of cooling fluid could bring high statistical uncertainty.

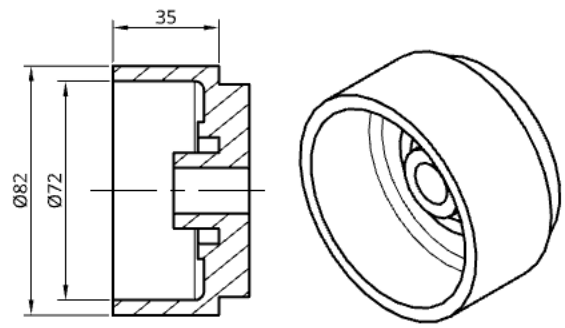

Fig. 5. Drawing of Fe—C -Cu PM part

The turning was performed with the following cutting parameters. The depth of cut (*a*) was chosen to be 0.3 mm, which is the typical depth of cut for finishing operations. Moreover, it was decided that in this experiment the depth of cut will not be one of the variables. The depth of cut cannot be adaptively changed during the machining process. Hence, it can not be an option for the design of adaptive cutting control, which allows adaptively changing the cutting conditions during machining. The feed (*f*) was chosen in the range of 0.05 mm/rev to 0.2 mm/rev with the following steps: 0.05; 0.1; 0.15 and 0.2 mm/rev. The feed of 0.2 mm/rev. is half of the insert radius (RE) 0.4 mm. The feed is a parameter allowing to increase productivity, but at the same time increase in the feed may increase the surface roughness, especially when the values of the feed approaches the radius of the nose of the cutting insert. The feed of 0.2 mm/rev may already be considered as a high feed for finishing operations. Geometric influence of the cutting insert may be observed for the feed of 0.2 mm/rev and higher. Hence, the feed of 0.2 mm/rev was chosen as the highest point in the range. The lowest value of the feed was restricted by productivity considerations as the feed below 0.05 mm/rev or even 0.1 mm/rev in the certain applications could not be considered as productive cutting conditions. The cutting speed (*v*) was chosen in the range of 250 to 750 m/min with the following steps: 250; 500 and 750 m/min with an additional test cutting speed of 1000 m/min. The additional test cutting speed was chosen to test a tendency of the surface roughness – will it increase further or could produce a decrease in the surface roughness. A preliminary test with a cutting speed of 1000 m/min indicated that there is no justification to increase the cutting speed. Moreover, the cutting was performed under dry conditions. Any further increase of the cutting speed would considerably increase the generated heat, which is certainly not advisable. The cutting parameters are indicated in Table 1.

After machining, the surface profile roughness measurements were performed with a contact profilometer TESA – Rugosurf 10. The following surface roughness characterizing parameters were chosen: an arithmetic roughness average of the surface profile (*R*a); an average of the tallest peak to the depth of the lowest valley (*R*q); and a root mean square of the surface roughness (*R*z).

Table 1. Set-up of machining parameters (*a*, *v*, *f*) and obtained surface roughness parameters (*R*a, *R*q, *R*z)

No.	Depth of cut *a*, mm	Cutting speed *v*, m/min	Feed *f*, mm/rev	Arithmetic roughness average of the surface profile *R*a, µm	Average of the tallest peak to the depth of the lowest valley *R*q, µm	Rot mean square of the surface roughness *R*z, µm
1	0.3	250	0.1	1.47 (1.82)	1.70	7.16
2	0.3	250	0.2	4.41	5.12	17.56
3	0.3	250	0.15	3.03	3.50	12.38
4	0.3	250	0.05	1.41	1.68	8.30
5	0.3	500	0.05	0.43	0.54	2.88
6	0.3	750	0.05	0.45	0.56	2.95
7	0.3	750	0.1	0.79	0.97	4.49
8	0.3	500	0.1	0.51	0.65	3.48
9	0.3	750	0.15	1.53	1.84	7.93
10	0.3	500	0.15	1.25	1.52	6.51
11	0.3	750	0.2	3.70	4.42	16.65
12	0.3	500	0.2	3.71	4.20	14.23
13	0.3	1000	0.1	1.52	1.88	8.55

The results of machining are compiled in Table 1 and Fig. 6 and Fig. 7. According to Table 1, the best surface roughness (*R*a 0.43 – 0.45 µm) was obtained under feed (*f*) of 0.05 mm/rev and cutting speed (*v*) of 500 to 750 m/min. The best results for surface roughness were obtained using the low feed, i.e., 0.05 to 0.1 mm/rev and average cutting speed, i.e. 500 to 750 m/min. An Additional experiment (No. 13, Table 1) was performed under high cutting speed.

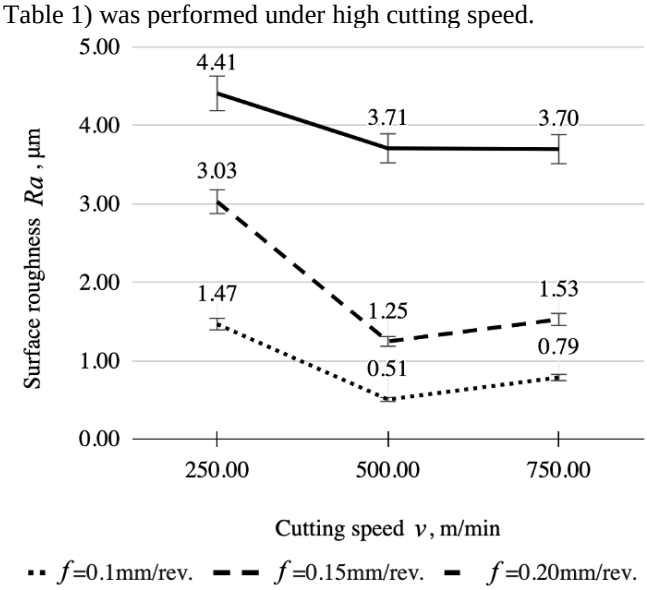

Fig. 6. Variation of surface roughness *R*a depending on cutting speed (*v*) under defined steps of the feed (*f*)

The results of this experiment No. 13 showed that a further increase in the cutting speed will not improve the surface roughness of the machined PM part. Increase in cutting speed results in the increase of vibrations which subsequently leave their mark on the surface roughness of the machined part. In comparison with the high cutting speed, the low cutting speed, i.e., 250 m/min under low feed, i.e., 0.05 mm/rev. allowed to obtain satisfactory surface roughness, i.e., 1.41 µm. But with an increase in the feed, the surface roughness also increases considerably. This may be explained by the lack of cutting energy with the increase of the chip thickness (surface) bringing additional vibrations into the cutting process, as a result of which the surface roughness increases considerably. In addition, another influential factor in the increase of surface roughness may be considered an inherited porosity of PM part. The feed is associated with a material removal rate. Increased material removal rate intensifies cutting conditions, which in turn intensifies chip formation. This aggressive chip formation tends to remove material (chips) with more energy, as a result of which the pores on the surface of the PM part are enlarged. Hence, the surface roughness also increases.

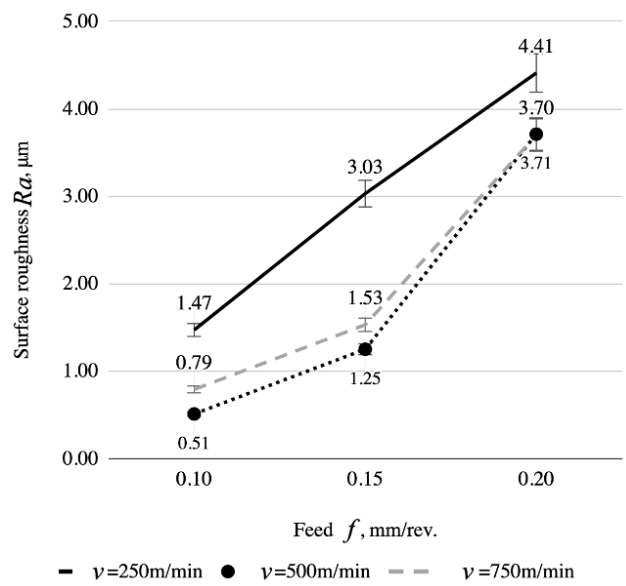

Fig. 7. Change of surface roughness *R*a depending on feed under defined steps of the cutting speed (*v*)

The experiments showed that to achieve satisfactory surface roughness an optimal envelope of cutting parameters should be defined and optimal cutting regimes shall be specified within this envelope of cutting parameters. As it is illustrated by Fig. 6 and Fig. 7, the best surface roughness was

obtained with low feed and average cutting speed areas. Low or high cutting speed within this predetermined envelope of cutting parameters results in unsatisfactory surface roughness.

An increase in feed (*f*) significantly increases the surface roughness (*R*a) as seen in Fig. 8. Moreover, the same Fig. 8 also illustrates a distribution of surface roughness on the circumference of the machined surface of the Fe--C -Cu PM part for experiments No. 8, 10 and 12 under constant cutting speed, *v* = 500 m/min. Surface roughness values were obtained using a measurement scheme illustrated in Fig. 9.

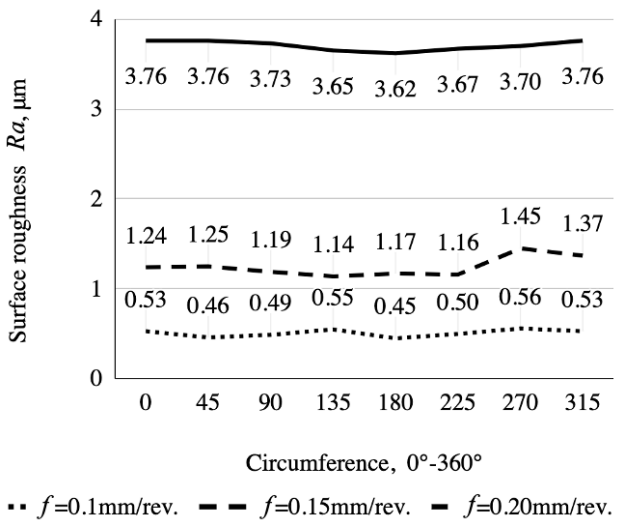

Fig. 8. Distribution of surface roughness on the circumference of the machined cylindrical surface

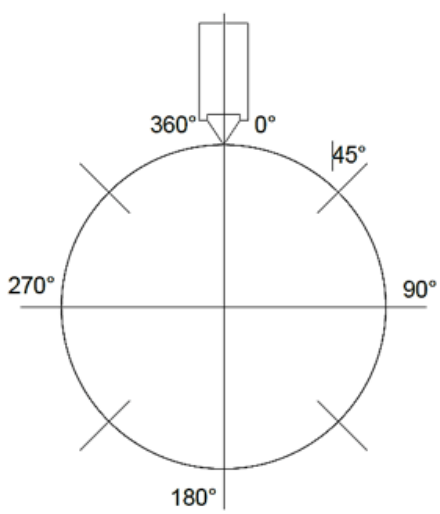

Fig. 9. Illustrates a surface roughness measurement scheme on a circumference of Fe--C -Cu PM part

Manufacturing of the Fe--C -Cu PM part is a highly technological process and certain defects may arise as a non-heterogeneous distribution of the material within the Fe—C -Cu PM part. One of the control methods is a X-ray scanning of the manufactured Fe--C -Cu PM part. In this research, we propose another method to control heterogeneously the Fe--C -Cu PM part. We propose to perform surface roughness measurements in certain steps around the circumference of the Fe--C -Cu PM part as shown in Fig. 9. Therefore, we obtain not only thoroughly surface roughness data, but we also receive feedback on how homogenous or heterogeneous the machined Fe--C -Cu PM part is. This is cost effective scheme in order to obtain preliminary analysis of how homogenous or heterogeneous is machined PM part.

Fig. 10. Morphology of chips

In addition to the analysis of the surface roughness, the morphology of the chips was analysed. Fig. 10 illustrates discontinuous chips. Moreover, this type of discontinuous chips is more specifically identified as a corkscrew chip [14]. Discontinuous chips are formed when brittle or hard metals like brass, bronze and cast iron are machined. The following type of chips was expected also in this experiment as the workpiece is a Cu containing (high content) material.

4. CONCLUSIONS AND FURTHER RESEARCH

Microstructure analysis of PM parts identified that the material's porosity is formed during sintering due to the low wettability of mullite with the matrix metal or pore caused by the diffusion of liquid copper into iron. This porosity is a distinguishing feature of PM parts compared to the parts made by conventional manufacturing methods.

Machining of composites such as Fe--C -Cu PM part is a complex physical process, and machining strategies for conventionally manufactured parts are not relevant. This paper provides a study on how cutting conditions influence the surface roughness of PM parts. When cutting PM, chips are formed that have a character of being continuous and segmented. It depends on the composition of the material and the cutting speed. Research has shown that feed (*f*) has a decisive effect on surface roughness. The smallest values of surface roughness were obtained when machining with feed (*f*) of 0.05 and 0.1 mm/rev. Cutting speed (*v*) was identified as a secondary influential parameter. Research has indicated that with an increase in cutting speed (*v*), the surface roughness increases only slightly compared to the influence of feed (f). This slight increase could be explained by increased vibrations on a machine, while machining with a high cutting speed (*v*).

Nevertheless, the research showed that a set-up of the feed (*f*) plays were crucial role in obtaining satisfactory surface roughness. Sometimes it may be necessary to the machine under low feed (losing productivity) to obtain satisfactory surface roughness.

In the same research, we propose a new surface roughness measurement scheme – measurement of surface roughness around a circumference of the cylindrical PM part to establish homogeneity or non-homogeneity of the PM part.

Acknowledgments

We would like to thank Riga Technical university (Latvia) for providing equipment, material and technical support.

REFERENCES

1. **Chang, I., Zhao, Y**. Advances in Powder Metallurgy. A volume in Wood head. Publishing Series in Metals and Surface Engineering. Woodhead Publishing; 1st edition. 2013: p. 624. ISBN 2013 978-0-85709-420-9. http://dx.doi.org/10.1533/9780857098900
2. **Upadhyaya, A., Upadhyaya, G.Sh.** Powder Metallurgy Science, Technology, and Materials. Published Aug. 16, Universities Press 2018. p. 536. ISBN 9781138075016.
3. **Danninger, H., Gierl-Mayer, C.** Advanced powder metallurgy steel alloys. In Advances in Powder Metallurgy (eds I. Chang and Y. Zhao), Woodward Publishing, Cambridge, 2013: pp. 149 – 201. https://doi.org/10.1533/9780857098900.2.149
4. **Kunal J.** Optimization of cutting conditions for sustainable machining of sintered powder metal steels using carbide tools, University of Kentucky Master's Thesis. 2006: p. 379.
5. **Sanderow, H., Spirko, J., Corrente, R.** The machinability of P/M materials as determined by drilling tests. In Advances in Powder Metallurgy & Particulate Materials, MPIF, Princeton, 1998. pp. 125 – 143.
6. **Salak, A., Selecka, M., Danninger, H.** Machinability of Powder Metallurgy Steels, Cambridge International Science Publishing, Cambridge. 2005: p. 300.
7. Machining guidelines. Höganäs Handbook for Sintered Components, Vol.5, Höganäs AB, Sweden.
8. **Ott, J., Burghardt, A., Britz, D., Mücklich, F.** Influence of porosity and impurities on the thermal conductivity of pressure-less sintered Cu powder green bodies *Powder Metallurgy* 64 (2) 2021: pp. 85 – 96. https://doi.org/10.1080/00325899.2021.1871806
9. **Watanabe, F., Hayashi**, **A.** Sintered Iron-Copper Alloys for Machine Parts *Journal of the Japan Society of powder and Powder Metallurgy* 5 (3) 1958. p.147 – 158. https://doi.org/10.2497/jjspm.5.147
10. **Morakotjinda, M., Krataitong, R., Wila, P., Siriphol, P., Daraphan, A., Coovattanachai, O., Tongsri, R.** Sintered Fe-Cu-C materials *Chiang Mai Journal of Science* 35 (2) 2008: pp. 258 – 265.
11. **Selcuk, C.** Joining processes for powder metallurgy parts, in Advances in Powder Metallurgy, Eds I. Chang and Y. Zhao. Woodward Publishing, Cambridge, 2013. pp. 380 – 398. https://doi.org/10.1533/9780857098900.3.380.
12. **Danninger, H., Gierl, C.** Powder metallurgy steels for highly loaded precision parts *International Journal of Materials and Product Technology* 28 (3/4) 2007: pp. 338 – 360. https://doi.org/10.1504/IJMPT.2007.013084
13. Turning tools. AB Sandvik Coromant, Erlanders. 2020.
14. **Jawahir, I.S.** Chip-forms, Chip Breakability and Chip Control. In: The International Academy for Production Engineering *CIRP Encyclopedia of Production Engineering* 2014: pp. 178 – 194. https://doi.org/10.1007/978-3-642-20617-7_6394
15. **Andersson, O.** Joining of P/M Parts by Brazing. PM 92-12, Aachen, Germany.
16. **Mironov, V.A.** Manufacturing Methods of Complex-shaped Powder Components *Materials Science (Medžiagotyra)* 12 (2) 2006: pp. 106 – 109.
17. **Iuliano, L., Settineri, L., Gatto, A.** High-Speed Turning Experiments on Metal Matrix Composites *Composites, Part A* 29 (12) 1998. pp. 1501 – 1509. https://doi.org/10.1016/S1359-835X(98)00105-5
18. **Joshi, S., Ramakrishnan, N., Ramakrishnan, P.** Microstructural Analysis of Chip Formation During Orthogonal Machining of Al/SiC Composites *ASME Journal of Engineering Materials and Technology* 123 (3) 2001: pp. 315 – 321. https://doi.org/10.1115/1.1356026

© Mironovs et al. *2023* Open Access This article is distributed under the terms of the Creative Commons Attribution 4.0 International License (http://creativecommons.org/licenses/by/4.0/), which permits unrestricted use, distribution, and reproduction in any medium, provided you give appropriate credit to the original author(s) and the source, provide a link to the Creative Commons license, and indicate if changes were made.